High Power Optical Circulator (TGG type 780nm~1064nm)

Features

Low Insertion Loss
High Return Loss
High Stability and Reliability

Application

Fiber Amplifier
Test System
Medical Equipment

Specifications

Paramete	Value
Center Wavelength (nm)	1064, 1050， 1030, 980, 850, 780
Bandwidth (nm)	±50
Typical Peak Isolation @23℃(dB)	25
Isolation@23℃(dB)	22
Typical Insertion Loss @23℃(dB)	1.3
Insertion Loss @23℃(dB)	1.5
PDL@23℃(dB)	0.15
Return Loss (dB)	45
Cross Talk	45
Power Handling （CW）(W)	0.3/0.5/1.0/5.0/10/20
Dimensions (mm)	68x28x26
Max. Peak Power(kW)	10
Tensile Load(N)	5
Operating Temperature (℃)	+10~+50
Storage Temperature (℃)	0~+60

*For device with connector IL is 0.3dB higher RL is 5dB lower ER is 2dB lower.

*The default connector key is aligned to slow axis.

Package Dimensions

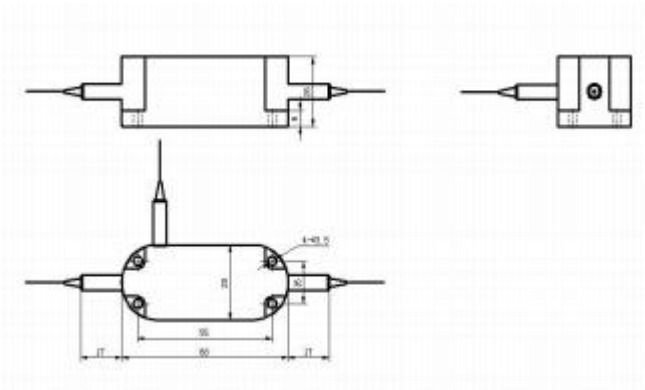

Ordering Information

LT-HFCIR	Wavelength	Type	Working axis	Fiber Type	Pigtail Type	Length	Connector
	0780=780	S=Single stage	N=non-PM	3=HI780fiber	1=250um bare fiber	H=0.5m	0=None
	0850=850nm			1=HI1060fiber	2=900um loose tube	8=0.8m	1=FC/UPC
	0980=980nm			S=Customer specified	3=3mm loose tube	1=1.0m	2=FC/APC
	1030=1030nm					5=1.5m	3=LC/UPC
	1050=1050nm					2=2.0m	4=LC/APC
	1064=1064nm					3=3.0m	5=SC/APC
						4=4.0m	6=SC/UPC